FAIRCHILD SEMICONDUCTOR®

April 2013

FAN7527B
Power Factor Correction Controller

Features

- Internal Startup Timer
- Internal R/C Filter Eliminates the Need for External R/C Filter
- Precise Adjustable Output Over-Voltage Protection
- Zero Current Detector
- One Quadrant Multiplier
- Trimmed 1.5% Internal Band Gap Reference
- Under-Voltage Lockout with 3 V of Hysteresis
- Totem-Pole Output with High-State Clamp
- Low Startup and Operating Current
- 8-Pin SOP or 8-Pin DIP

Applications

- Electronic Ballast
- SMPS

Description

The FAN7527B provides simple and high-performance active Power Factor Correction (PFC). The FAN7527B is optimized for electronic ballasts and low–power, high-density power supplies that require minimum board size, reduced external components, and low power dissipation. Because the R/C filter is included in the current-sense block, an external R/C filter is not necessary. Special circuitry prevents no-load runaway conditions. Regardless of the supply voltage, the output drive clamping circuit limits the overshoot of the power MOSFET gate drive, which improves system reliability.

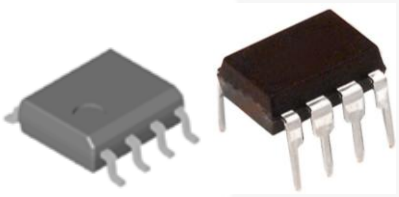

Ordering Information

Part Number	Operating Temperature Range	Package	Packing Method
FAN7527BMX	-25 to +125°C	8-Lead, Small Outline Package (SOP)	Tape and Reel
FAN7527BN	-25 to +125°C	8-Lead, Dual Inline Package (DIP)	Tube

© 2003 Fairchild Semiconductor Corporation

Block Diagram

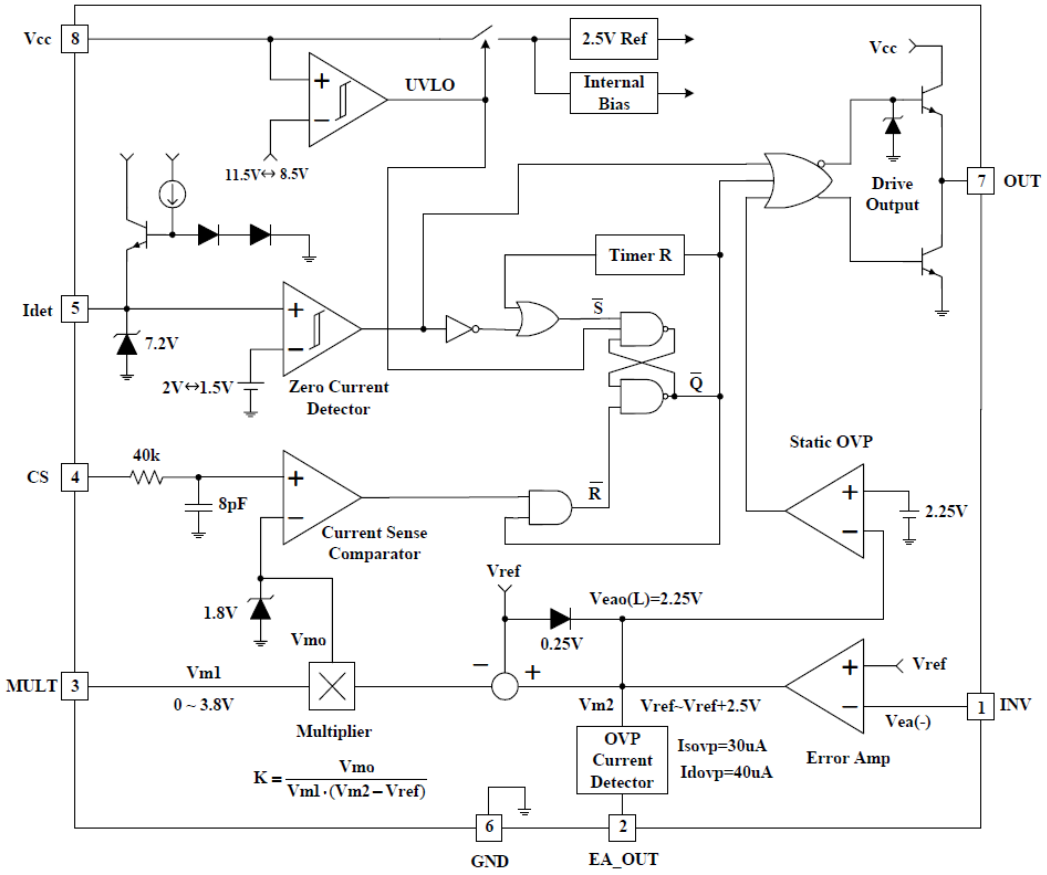

Figure 1. Block Diagram

Pin Configuration

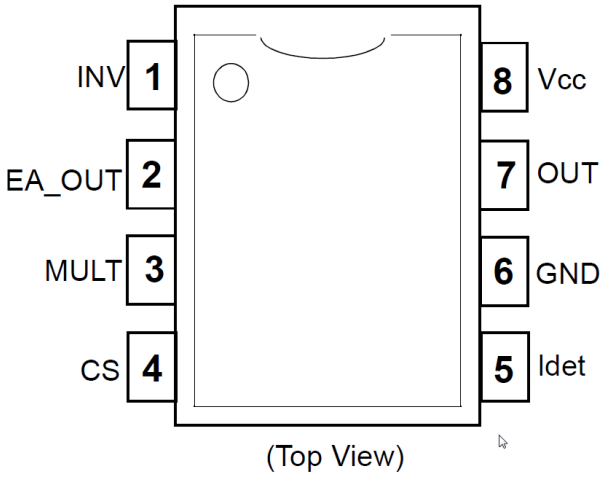

Figure 2. Pin Configuration

Pin Definitions

Pin #	Name	Description
1	INV	Inverting input of the error amplifier. The output of the boost converter should be resistively divided to 2.5 V and connected to this pin.
2	EA_OUT	Output of the error amplifier. Feedback compensation network is placed between this pin and the INV pin.
3	MULT	Input to the multiplier stage. The full-wave rectified AC voltage is divided to less than 2 V and is connected to this pin.
4	CS	Input of the PWM comparator. The MOSFET current is sensed by a resistor and the resulting voltage is applied to this pin. An internal R/C filter is included to reject high-frequency noise.
5	Idet	Zero Current Detection (ZCD) input.
6	GND	Ground
7	OUT	Gate driver output. Push-pull output stage is able to drive the power MOSFET with a peak current of 500 mA.
8	V_{CC}	Supply voltage of driver and control circuits.

© 2003 Fairchild Semiconductor Corporation

Absolute Maximum Ratings

Stresses exceeding the absolute maximum ratings may damage the device. The device may not function or be operable above the recommended operating conditions and stressing the parts to these levels is not recommended. In addition, extended exposure to stresses above the recommended operating conditions may affect device reliability. The absolute maximum ratings are stress ratings only.

Symbol	Parameter		Min.	Max.	Unit
V_{CC}	Supply Voltage			30	V
I_{OH}, I_{OL}	Peak Drive Output Current			±500	mA
I_{CLAMP}	Driver Output Clamping Diodes $V_O > V_{CC}$ or V_O<-0.3 V			±10	mA
I_{DET}	Detector Clamping Diodes			±10	mA
V_{IN}	Error Amplifier Multiplier and Comparator Input Voltages		-0.3	6.0	V
T_J	Operation Junction Temperature			+150	°C
T_{OPR}	Operating Temperature Range		-25	+125	°C
T_{STG}	Storage Temperature Range		-65	+150	°C
P_D	Power Dissipation	8-SOP		0.8	W
		8-DIP		1.1	W
Θ_{JA}	Thermal Resistance Junction-Ambient	8-SOP		150	°C/W
		8-DIP		110	°C/W

Temperature Characteristics

-25°C ≤ T_A ≤ 125°C.

Symbol	Parameter	Min.	Typ.	Max.	Unit
ΔV_{REF}	Temperature Stability Reference Voltage (V_{REF})		20		mV
$\Delta K/\Delta T$	Temperature Stability for Multiplier Gain (K)		-0.2		% / °C

© 2003 Fairchild Semiconductor Corporation

Electrical Characteristics

V_{CC}= 14 V, -25°C ≤ T_A ≤ 125°C, unless otherwise stated.

Symbol	Parameter	Conditions	Min.	Typ.	Max.	Unit
Under-Voltage Lockout						
$V_{th(st)}$	Start Threshold Voltage	V_{CC} Increasing	10.5	11.5	12.5	V
$H_{Y(st)}$	UVLO Hysteresis		2	3	4	V
Supply Current Section						
I_{ST}	Startup Supply Current	V_{CC} = $V_{th(st)}$ -0.2 V	10	60	100	µA
I_{CC}	Operating Supply Current	Output Not Switching		3	6	mA
$I_{CC(OVP)}$	Operating Current at OVP	V_{INV} = 3 V		1.7	4.0	mA
I_{DCC}	Dynamic Operating Supply Current	50 kHz, C_l = 1 nF		4	8	mA
Error Amplifier Section						
V_{REF}	Voltage Feedback Input Threshold	I_{REF} = 0 mA, T_A = 25°C	2.465	2.500	2.535	V
		25°C ≤ T_A ≤ 125°C	2.440	2.500	2.560	
ΔV_{FEF1}	Line Regulation	14 V ≤ V_{CC} ≤ 25 V		0.1	10.0	mV
ΔV_{FEF3}	Temperature Stability of V_{REF}[1]	-25°C ≤ T_A ≤ 125°C		20		mV
$I_{b(ea)}$	Input Bias Current		-0.5		0.5	µA
I_{SOURCE}	Output Source Current	V_{M2} = 4 V	-2	-4		mA
I_{SINK}	Output Sink Current	V_{M2} = 4 V	2	4		mA
$V_{EAO(H)}$	Output Upper Clamp Voltage[1]	I_{SOURCE} = 0.1 mA		6		V
$V_{EAO(L)}$	Output Lower Clamp Voltage[1]	I_{SINK} = 0.1 mA		2.25		V
G_V	Large Signal Open-Loop Gain[1]		60	80		dB
PSRR	Power Supply Rejection Ratio[1]	14 V ≤ V_{CC} ≤ 25 V	60	80		dB
GBW	Unity Gain Bandwidth[1]			1		MHZ
SR	Slew Rate[1]			0.6		V/µs
Multiplier Section						
$I_{b(m)}$	Input Bias Current (Pin 3)		-0.5		0.5	µA
ΔV_{M1}	M1 Input Voltage Range (Pin 3)				3.8	V
ΔV_{M2}	M2 Input Voltage Range (Pin 2)		V_{REF}		V_{REF}+2.5	V
K	Multiplier Gain[1]	V_{M1} = 1 V, V_{M2} = 3.5 V	0.36	0.44	0.52	1 / V
$V_{OMAX(m)}$	Maximum Multiplier Output Voltage	V_{INV} =0 V, V_{M1} = 4 V	1.65	1.80	1.95	V
$\Delta K/\Delta T$	Temperature Stability of K[1]	-25 ≤ T_A ≤ 125°C		-0.2		% / °C
Current Sense Section						
$V_{IO(CS)}$	Input Offset Voltage[1]	V_{M1} = 0 V, V_{M2} = 2.2 V	-10	3	10	mV
$I_{b(CS)}$	Input Bias Current	0 V ≤ V_{CS} ≤ 1.7 V	-1.0	-0.1	1.0	µA
$t_{D(CS)}$	Current Sense Delay to Output[1]			200	500	ns

Continued on the following page…

© 2003 Fairchild Semiconductor Corporation

Electrical Characteristics (Continued)

V_{CC}= 14 V, -25°C ≤ T_A ≤ 125°C, unless otherwise stated.

Symbol	Parameter	Conditions	Min.	Typ.	Max.	Unit
Zero Current Detect Section						
$V_{TH(DET)}$	Input Voltage Threshold	V_{DET} Increasing	1.7	2.0	2.3	V
$H_{Y(DET)}$	Detect Hysteresis		0.2	0.5	0.8	V
$V_{CLAMP(I)}$	Input Low Clamp Voltage	I_{DET} = -100 µA	0.45	0.75	1.00	V
$V_{CLAMP(H)}$	Input High Clamp Voltage	I_{DET} = 3 mA	6.5	7.2	7.9	V
$I_{b(DET)}$	Input Bias Current	1 V ≤ V_{DET} ≤ 5 V	-1.0	-0.1	1.0	µA
$I_{CLAMP(D)}$	Input High/Low Clamp Diode Current(1)				±3	mA
Output Section						
V_{OH}	Output Voltage High	I_O = -10 mA	10.5	11.0		V
V_{OL}	Output Voltage Low	I_O = 10 mA		0.8	1.0	V
t_R	Rising Time(1)	C_L = 1 nF		130	200	ns
t_F	Falling Time(1)	C_L = 1 nF		50	120	ns
$V_{OMAX(O)}$	Maximum Output Voltage	V_{CC} = 20 V, I_O = 100 µA	12	14	16	V
$V_{OMIN(O)}$	Output Voltage with UVLO Activated	V_{CC} = 5 V, I_O = 100 µA			1	V
Restart Timer Section						
$t_{D(RST)}$	Restart Time Delay	V_{M1} = 1 V, V_{M2} = 3.5 V		150		µs
Over-Voltage Protection Section						
I_{SOVP}	Soft OVP Detecting Current		25	30	35	µA
I_{DOVP}	Dynamic OVP Detecting Current		35	40	45	µA
V_{OVP}	Static OVP Threshold Voltage	V_{INV} = 2.7 V	2.10	2.25	2.40	V

Note:

1. These parameters, although guaranteed, are not 100% tested in production.

Multiplier Gain:

$$K = \frac{Pin4_Threshold}{V_{M1} \times (V_{M2} - V_{REF})}$$

where $V_{M1} = V_{PIN3}$, $V_{M2} = V_{PIN2}$

© 2003 Fairchild Semiconductor Corporation

Typical Performance Characteristics

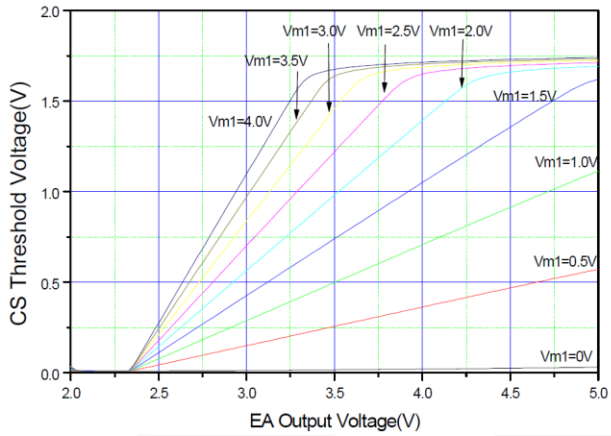

Figure 3. Error Amplifier Output Voltage vs. Current Sensing Threshold

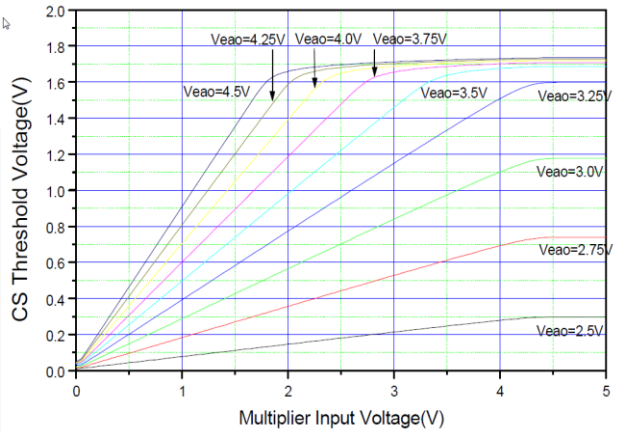

Figure 4. Multiplier Input Voltage vs. Current Sensing Threshold

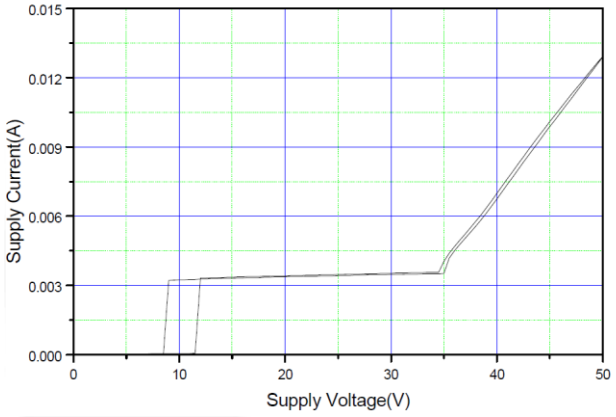

Figure 5. Supply Current vs. Supply Voltage

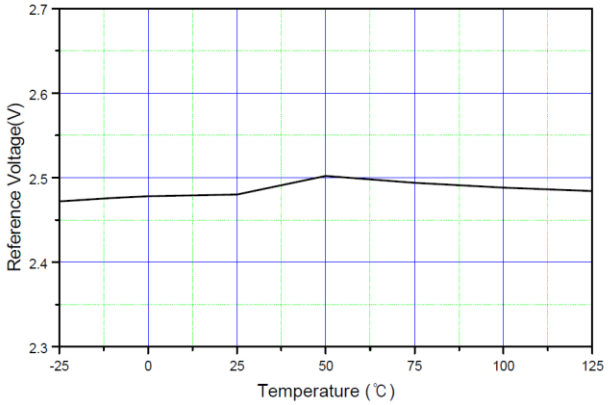

Figure 6. Reference Voltage vs. Temperature

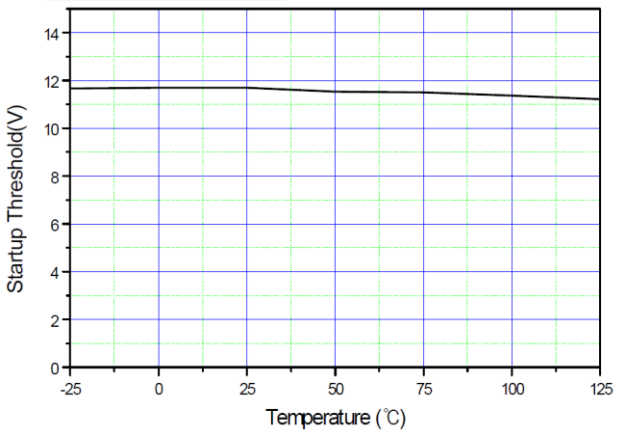

Figure 7. Startup Threshold vs. Temperature

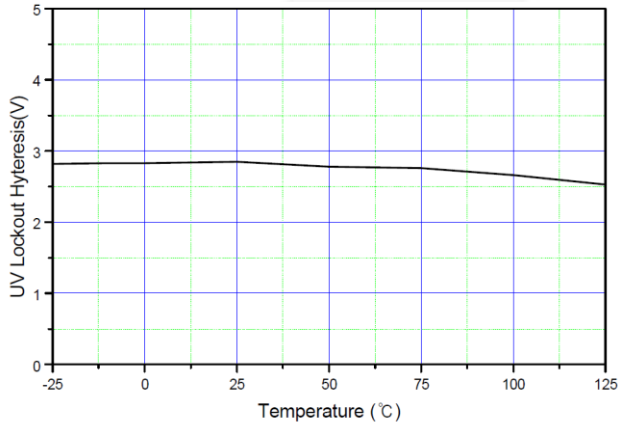

Figure 8. UVLO Hysteresis vs. Temperature

Typical Performance Characteristics (Continued)

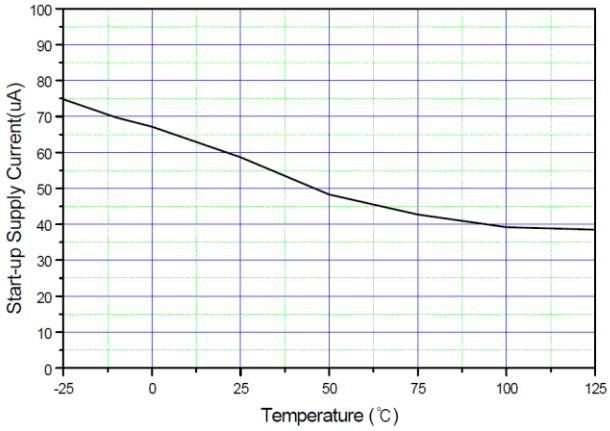

Figure 9. Startup Supply Current vs. Temperature

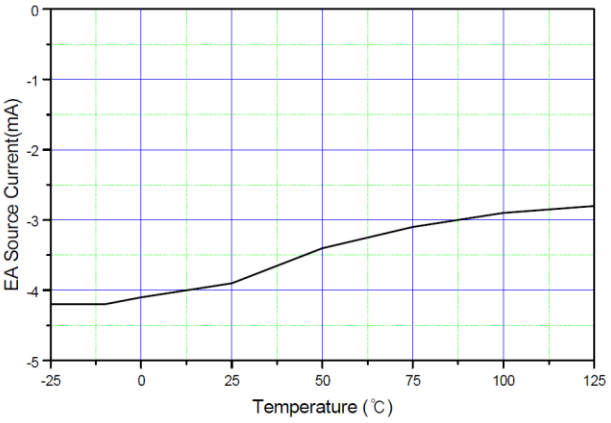

Figure 10. Error Amplifier Source Current

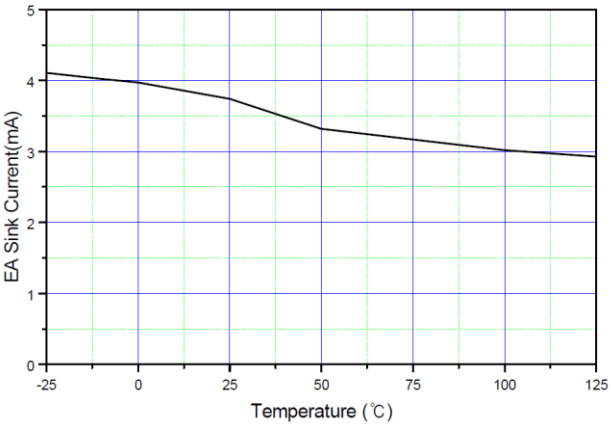

Figure 11. Error Amplifier Sink Current vs. Temperature

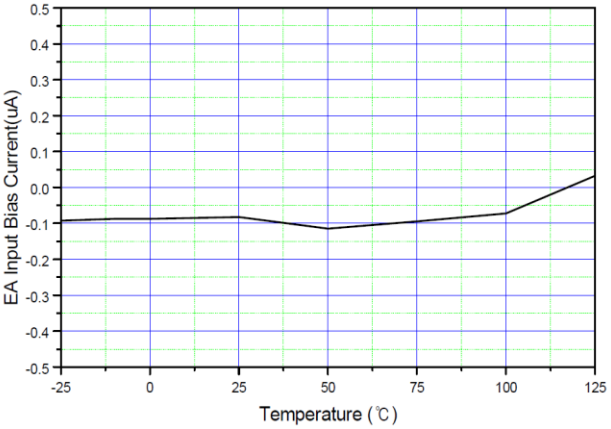

Figure 12. Error Amplifier Input Bias Current vs. Temperature

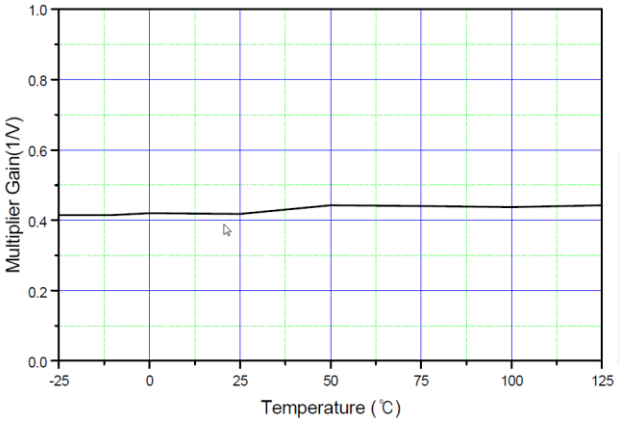

Figure 13. Multiplier Gain vs. Temperature

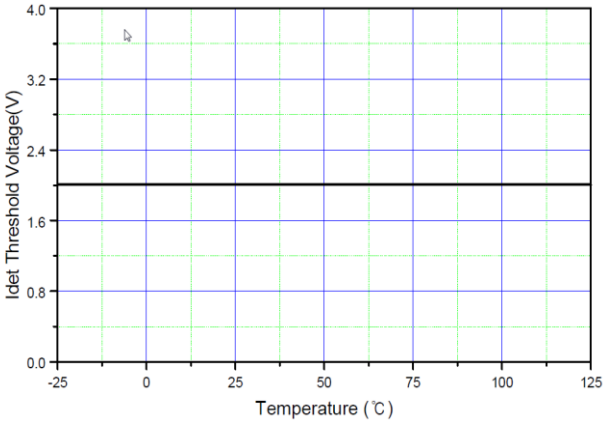

Figure 14. I_{DET} Threshold Voltage vs. Threshold

© 2003 Fairchild Semiconductor Corporation

Typical Performance Characteristics (Continued)

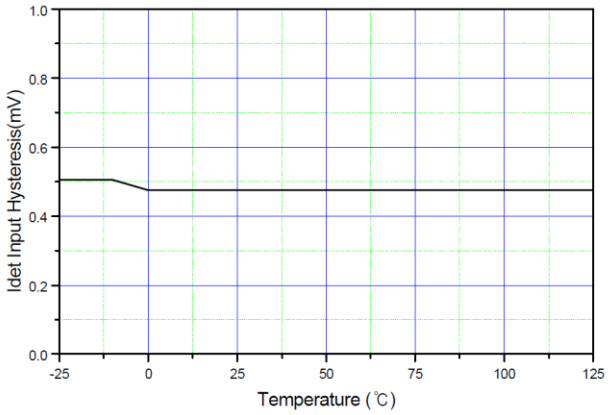

Figure 15. IDET Input Hysteresis vs. Temperature

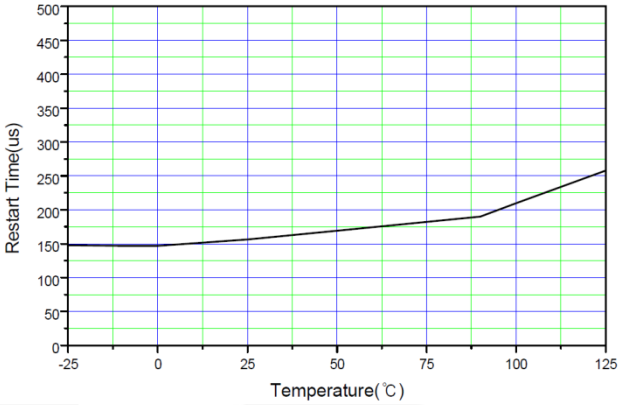

Figure 16. Restart Time vs. Temperature

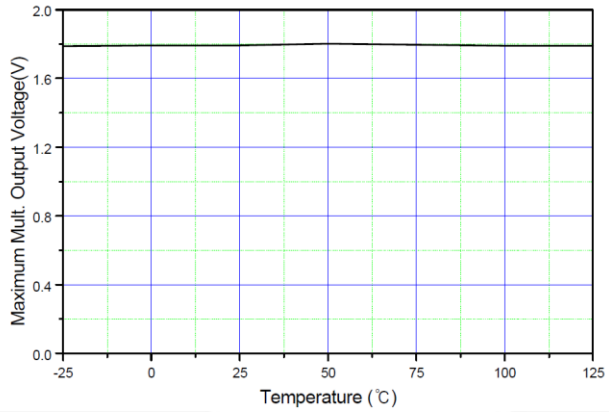

Figure 17. Maximum Multiplier Output Voltage vs. Temperature

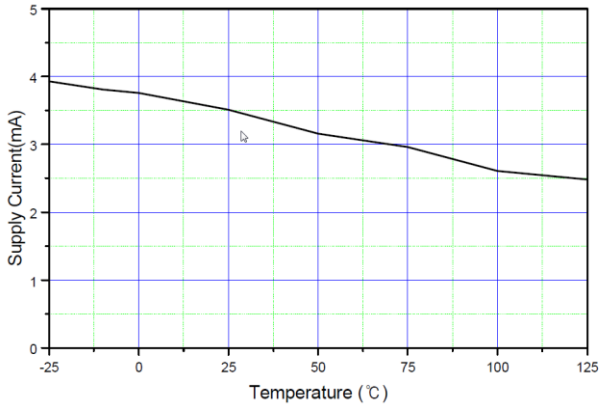

Figure 18. Supply Current vs. Temperature

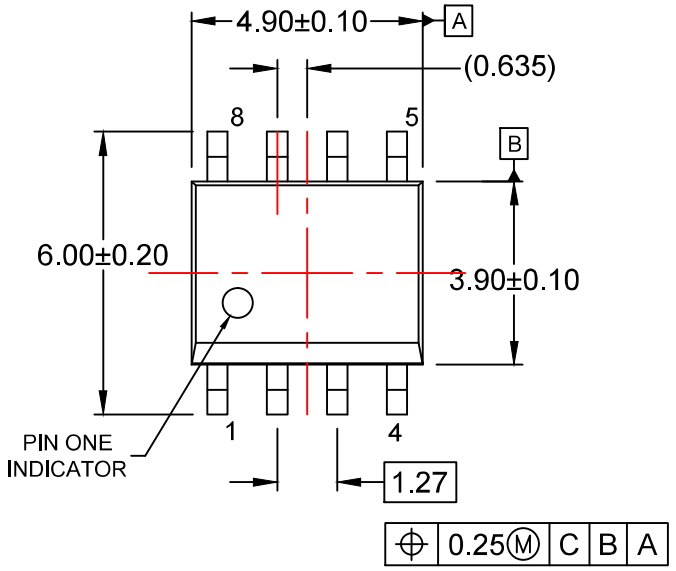

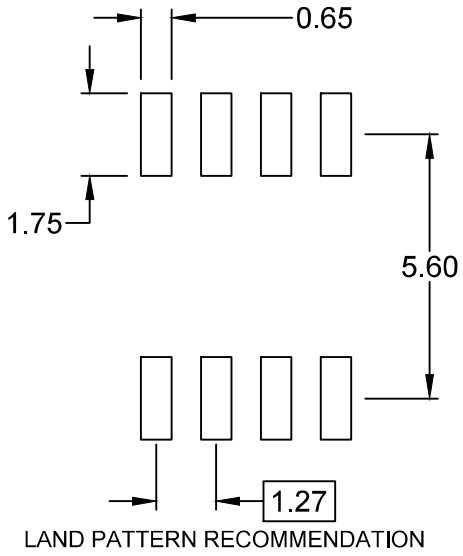

LAND PATTERN RECOMMENDATION

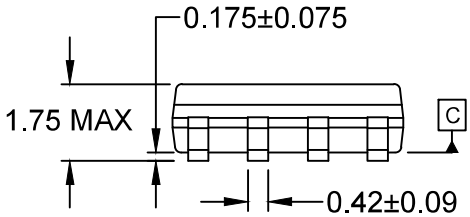

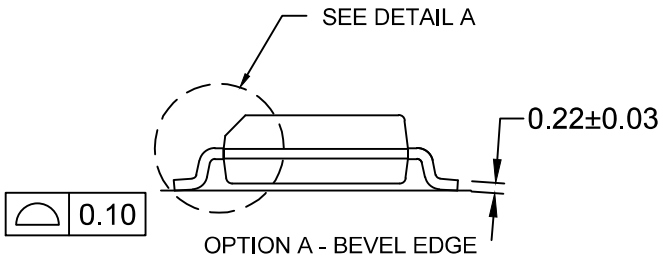

OPTION A - BEVEL EDGE

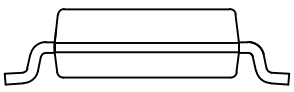

OPTION B - NO BEVEL EDGE

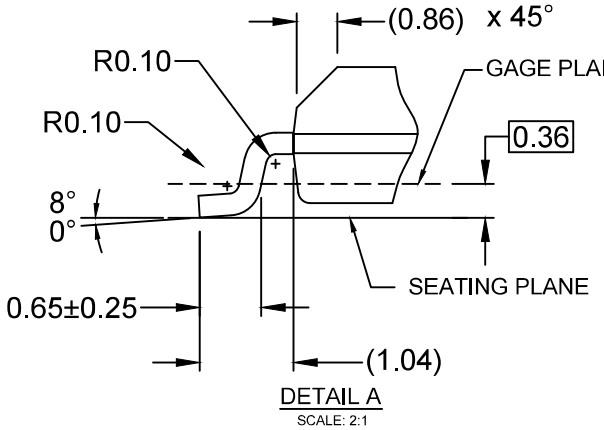

DETAIL A
SCALE: 2:1

NOTES:

A) THIS PACKAGE CONFORMS TO JEDEC MS-012, VARIATION AA.
B) ALL DIMENSIONS ARE IN MILLIMETERS.
C) DIMENSIONS DO NOT INCLUDE MOLD FLASH OR BURRS.
D) LANDPATTERN STANDARD: SOIC127P600X175-8M
E) DRAWING FILENAME: M08Arev16

FAIRCHILD.

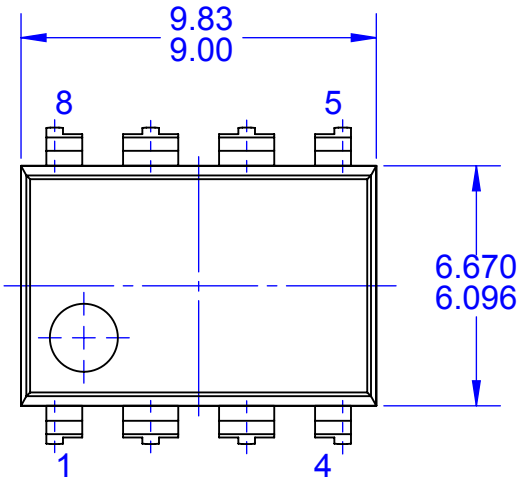

TOP VIEW

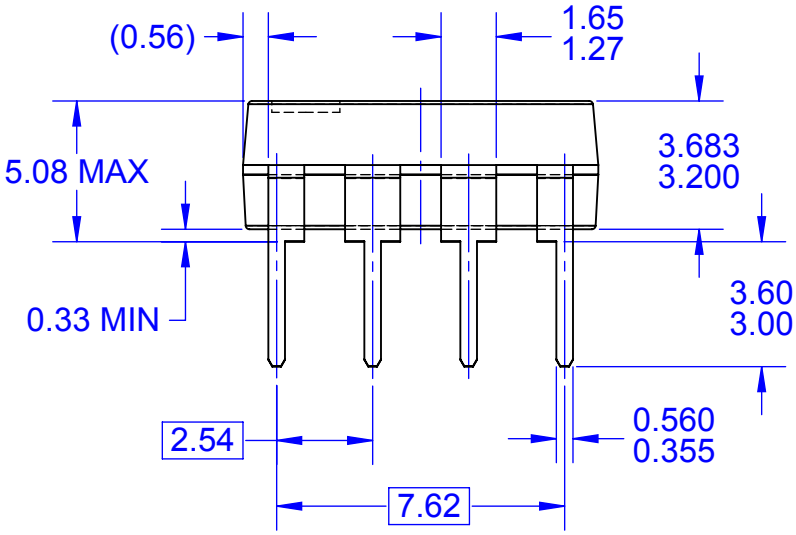

FRONT VIEW

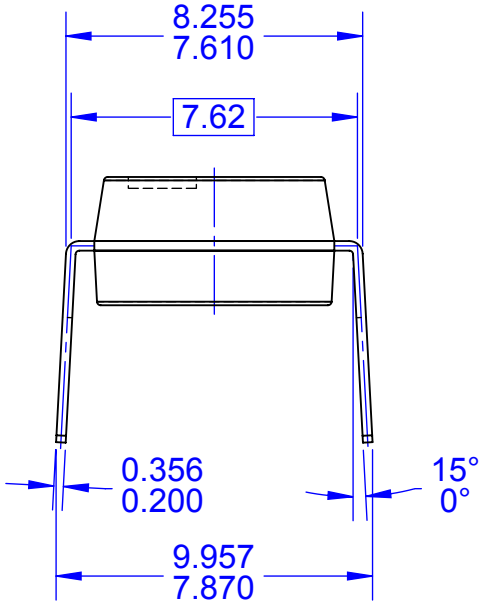

SIDE VIEW

NOTES:

A. CONFORMS TO JEDEC MS-001, VARIATION BA
B. ALL DIMENSIONS ARE IN MILLIMETERS
C. DIMENSIONS ARE EXCLUSIVE OF BURRS, MOLD FLASH, AND TIE BAR EXTRUSIONS
D. DIMENSIONS AND TOLERANCES PER ASME Y14.5M-2009
E. DRAWING FILENAME: MKT-N08Frev3

FAIRCHILD ™

TRADEMARKS

The following includes registered and unregistered trademarks and service marks, owned by Fairchild Semiconductor and/or its global subsidiaries, and is not intended to be an exhaustive list of all such trademarks.

AccuPower™
AttitudeEngine™
Awinda®
AX-CAP®*
BitSiC™
Build it Now™
CorePLUS™
CorePOWER™
CROSSVOLT™
CTL™
Current Transfer Logic™
DEUXPEED®
Dual Cool™
EcoSPARK®
EfficientMax™
ESBC™
®
Fairchild®
Fairchild Semiconductor®
FACT Quiet Series™
FACT®
FastvCore™
FETBench™
FPS™
F-PFS™
FRFET®
Global Power Resource℠
GreenBridge™
Green FPS™
Green FPS™ e-Series™
G*max*™
GTO™
IntelliMAX™
ISOPLANAR™
Making Small Speakers Sound Louder and Better™
MegaBuck™
MICROCOUPLER™
MicroFET™
MicroPak™
MicroPak2™
MillerDrive™
MotionMax™
MotionGrid®
MTi®
MTx®
MVN®
mWSaver®
OptoHiT™
OPTOLOGIC®
OPTOPLANAR®
®
Power Supply WebDesigner™
PowerTrench®
PowerXS™
Programmable Active Droop™
QFET®
QS™
Quiet Series™
RapidConfigure™
™
Saving our world, 1mW/W/kW at a time™
SignalWise™
SmartMax™
SMART START™
Solutions for Your Success™
SPM®
STEALTH™
SuperFET®
SuperSOT™-3
SuperSOT™-6
SuperSOT™-8
SupreMOS®
SyncFET™
Sync-Lock™
SYSTEM GENERAL®*
TinyBoost®
TinyBuck®
TinyCalc™
TinyLogic®
TINYOPTO™
TinyPower™
TinyPWM™
TinyWire™
TranSiC™
TriFault Detect™
TRUECURRENT®*
µSerDes™
SerDes™
UHC®
Ultra FRFET™
UniFET™
VCX™
VisualMax™
VoltagePlus™
XS™
Xsens™
仙童®

* Trademarks of System General Corporation, used under license by Fairchild Semiconductor.

DISCLAIMER

FAIRCHILD SEMICONDUCTOR RESERVES THE RIGHT TO MAKE CHANGES WITHOUT FURTHER NOTICE TO ANY PRODUCTS HEREIN TO IMPROVE RELIABILITY, FUNCTION, OR DESIGN. TO OBTAIN THE LATEST, MOST UP-TO-DATE DATASHEET AND PRODUCT INFORMATION, VISIT OUR WEBSITE AT HTTP://WWW.FAIRCHILDSEMI.COM. FAIRCHILD DOES NOT ASSUME ANY LIABILITY ARISING OUT OF THE APPLICATION OR USE OF ANY PRODUCT OR CIRCUIT DESCRIBED HEREIN; NEITHER DOES IT CONVEY ANY LICENSE UNDER ITS PATENT RIGHTS, NOR THE RIGHTS OF OTHERS. THESE SPECIFICATIONS DO NOT EXPAND THE TERMS OF FAIRCHILD'S WORLDWIDE TERMS AND CONDITIONS, SPECIFICALLY THE WARRANTY THEREIN, WHICH COVERS THESE PRODUCTS.

AUTHORIZED USE

Unless otherwise specified in this data sheet, this product is a standard commercial product and is not intended for use in applications that require extraordinary levels of quality and reliability. This product may not be used in the following applications, unless specifically approved in writing by a Fairchild officer: (1) automotive or other transportation, (2) military/aerospace, (3) any safety critical application – including life critical medical equipment – where the failure of the Fairchild product reasonably would be expected to result in personal injury, death or property damage. Customer's use of this product is subject to agreement of this Authorized Use policy. In the event of an unauthorized use of Fairchild's product, Fairchild accepts no liability in the event of product failure. In other respects, this product shall be subject to Fairchild's Worldwide Terms and Conditions of Sale, unless a separate agreement has been signed by both Parties.

ANTI-COUNTERFEITING POLICY

Fairchild Semiconductor Corporation's Anti-Counterfeiting Policy. Fairchild's Anti-Counterfeiting Policy is also stated on our external website, www.fairchildsemi.com, under Terms of Use

Counterfeiting of semiconductor parts is a growing problem in the industry. All manufacturers of semiconductor products are experiencing counterfeiting of their parts. Customers who inadvertently purchase counterfeit parts experience many problems such as loss of brand reputation, substandard performance, failed applications, and increased cost of production and manufacturing delays. Fairchild is taking strong measures to protect ourselves and our customers from the proliferation of counterfeit parts. Fairchild strongly encourages customers to purchase Fairchild parts either directly from Fairchild or from Authorized Fairchild Distributors who are listed by country on our web page cited above. Products customers buy either from Fairchild directly or from Authorized Fairchild Distributors are genuine parts, have full traceability, meet Fairchild's quality standards for handling and storage and provide access to Fairchild's full range of up-to-date technical and product information. Fairchild and our Authorized Distributors will stand behind all warranties and will appropriately address any warranty issues that may arise. Fairchild will not provide any warranty coverage or other assistance for parts bought from Unauthorized Sources. Fairchild is committed to combat this global problem and encourage our customers to do their part in stopping this practice by buying direct or from authorized distributors.

PRODUCT STATUS DEFINITIONS

Definition of Terms

Datasheet Identification	Product Status	Definition
Advance Information	Formative / In Design	Datasheet contains the design specifications for product development. Specifications may change in any manner without notice.
Preliminary	First Production	Datasheet contains preliminary data; supplementary data will be published at a later date. Fairchild Semiconductor reserves the right to make changes at any time without notice to improve design.
No Identification Needed	Full Production	Datasheet contains final specifications. Fairchild Semiconductor reserves the right to make changes at any time without notice to improve the design.
Obsolete	Not In Production	Datasheet contains specifications on a product that is discontinued by Fairchild Semiconductor. The datasheet is for reference information only.

Rev. I77